BEL-600

Provisional Tech Spec Sheet

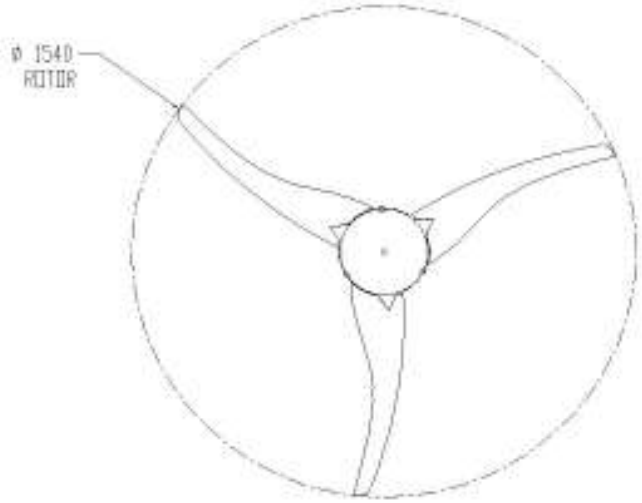

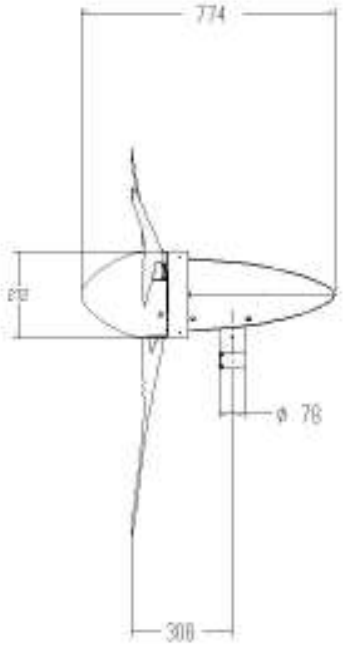

Rotor Diameter:	1.54m
Rotor Type:	3-Blade Downwind
Blade Material:	Glass Reinforced Nylon
Rated Wind Velocity:	7.20m/s (16.2mph)
Rated Output:	160watts
Peak Output:	700watts
Cut-in Wind Velocity:	3m/s (6.7mph)
Generator Type:	3-Ph Brushless NIB hybrid rotor out-runner PMA
Voltage Variants:	12v, 24v, 48v off-grid 'Windmaster' Grid-tie
Control:	Passive Stall Thermal Shut-down
Head Weight:	26.5kg
Tower Mount:	88.9mm O/D x 3mm Wall
Estimated AEP:	250-1900kWh*
Acoustic Levels (30m):	54dB(A) Equivalent to normal speech
Lifetime & Servicing:	20yr life, yearly service

The BEL600 has been designed primarily for off-grid applications which require an intermediate power input. By combining the successful design philosophies from both the BEL300 and BEL1000, the result is an extreme environment capable small wind turbine which offers exceptional value for money and great reliability. Typical applications for the BEL600 include, unmanned monitoring stations, gas extraction platforms, live aboard marine vessels, road and safety signage & general off-grid power augmentation.

The BEL600 is unique as a downwind turbine in this size category. This lends many advantages from reduced foot-print / operating envelope to high stability in turbulent and gusty wind conditions. The unique swept turbine blades are engineered to perfectly match the alternator giving perfect synergy in operation whilst minimising turbine acoustics. The injection moulded, glass reinforced nylon blades are highly durable and virtually indestructible in all environments and climates. The alternator is engineered to absorb all of the power that can be transmitted from the main rotor ensuring that power conversion is maximised and the main rotor is highly controlled. A thermal shut-down system also automatically shuts the turbine down during prolonged high wind events.

Power from the BEL600 is transmitted as 'wild' AC and is rectified to DC within the Power Conditioning Unit (PCU). This means that even 12v power can be transmitted over relatively long distances with smaller, cheaper and easier to install cables. The PCU is also equipped with an integrated run/ stop switch, ammeter and over-voltage protection when used with grid-tie variants.

As with all Leading Edge products, the BEL600 has been designed and manufactured in the UK to the highest standard to give maximum value in the most demanding environments.